Crystal Quartz Polarizers for the Infra-Red Waveband

Knight Optical can offer Crystal Quartz (SiO_2) Polarizers for Infra-red systems over the waveband of 0.2 to 2.3µm. Crystal Quartz is a birefringent material that makes it useful for polarizers and waveplates. A typical arrangement for laser polarizers is in the Wollaston Prism is a polariser using Crystal Quartz. The Wollaston consists of two prisms that are cemented together and the two output rays, the s and p polarisation, are deviated nearly symmetrically within a degree or two.

The deviation is about ±1° at 2.3µm and increases as the wavelength is reduced, about ±3° at 200nm.

The clear aperture is about 10mm in diameter with a wavefront distortion that is less than one quarter of a wave at 633nm. Wollaston Prisms' are used in spectrometers and other optical arrangements to separate, or combine, the s and p polarizations. The extinction ratio is 100,000:1.

The Rochon is another configuration that uses crystal quartz for depolarizers as in the figure below. The Rochon operates by having the ordinary and extraordinary rays propagate co-linearly along the optic axis of the first prism.

Upon entering the second prism the ordinary ray 'sees' the same refractive index and thus continues undeviated at this interface. However, the extraordinary beam now 'sees' a lower refractive index and is thus refracted at the interface.

The angle of refraction is further increased at the exit surface. It is possible to have tune the separation angle at a specific wavelength within the limits for crystal quartz, which is 1.46° at 200nm and 1.00 at 2µm. The extinction ratio is 100,000:1 as with the Wollaston prism.

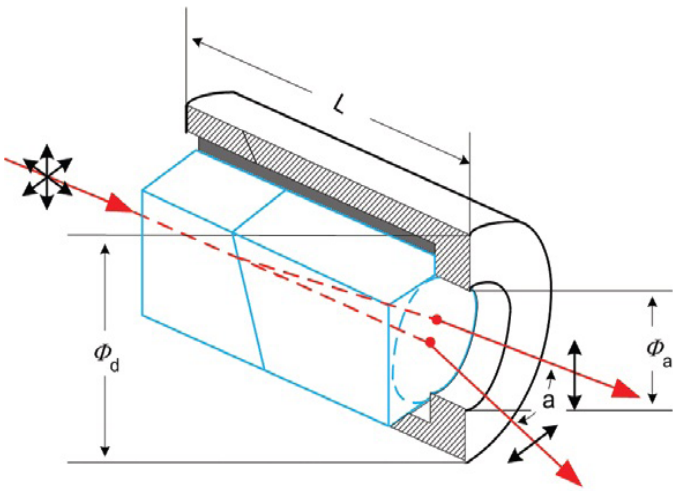

+44 (0)1622 859444
info@knightoptical.co.uk
www.knightoptical.com

Crystal Quartz Polarizers for the Infra-Red Waveband

Crystal Quartz is used to make Depolarizer that consist of two wedge plates where one is twice the thickness of the other, and the optic axes of the plates lying in the plane of the plates with a mutual 45° angle between them. The result is a variable retardation plate over the aperture, which produces depolarization for all wavelengths. Anti-reflection coatings are required on the entrance and exit plates to minimize beam loss.

Crystal Quartz is an excellent material for quarter and half wave plates within wavelength ranges. It is available for other retardation lengths. A quarter wave plate when linearly polarized light is incident upon the surface at 45° to the axis of a quarter wave plate, the output becomes circularly polarized.

The reverse happens when circularly polarized light inputs the plate, then linear polarized light exits at 45° to the axis. Half wave plates rotate the incoming polarized light to any desired angle. The rotation angle is twice the angle between the incident light and the optical axis.

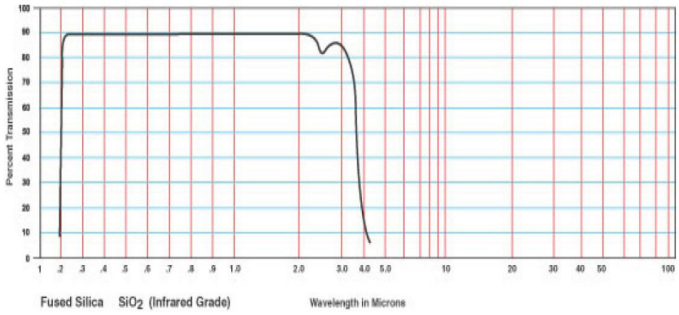

Other orders are available, such as Zero order waveplates and multi-order waveplates.

Knight Optical supply a range of quality Crystal Quartz optical components including Crystal Quartz polarizers and windows, Crystal Quartz lenses, Crystal Quartz prisms, and Crystal Quartz polarizers either from stock or bespoke custom made to your specification for a range of applications. Every component is individually tested by our highly skilled technicians in our state of the art metrology lab to ensure all components meet our high quality standards.

Contact our multilingual technical sales team and discover how Knight Optical's high quality Crystal Quartz optics and superior service can improve your instrumentation and supply chain experience.
Tel +44 (0)1622 859 444

ISO 9001:2008 REGISTERED FIRM

+44 (0)1622 859444
info@knightoptical.co.uk
www.knightoptical.com